# SFP-DBRNN: A Real-time Signal Filtering and Predicting Framework based on Deep Bidirectional Recurrent Neural Networks

Soroosh Shahtalebi*†, *Student Member, IEEE*, Seyed Farokh Atashzar‡, *Member, IEEE*,
Rajni V. Patel‡, *Life Fellow, IEEE* and Arash Mohammadi†, *Senior Member, IEEE*,
†Concordia Institute for Information System Engineering (CIISE), Concordia University, Montreal, QC, Canada
‡Electrical and Computer Engineering, University of Western Ontario, London, ON, Canada

***Abstract*—Pathological tremor is among the most common movement disorders which is considered as the involuntary, rhythmic and high-frequency movements of the subject. Aging, as well as some diseases like Parkinson's Disease (PD) and Essential Tremor (ET), are the most frequent contributing factors to tremor. Pathological tremor extraction is of paramount importance in various engineering and clinical applications such as robotic surgery, assistive devices, and rehabilitation setups. Numerous works in the literature have attempted to estimate/extract the tremor from movement recordings. In this work, we argue that the ground truth for the tremor (or the voluntary movement) that is deployed by previous works is not accurate enough and thus the performance measures for the prior techniques are not reliable. In this regard, we propose a novel technique for the first time in this line of research which incorporates the Deep Bidirectional Recurrent Neural Networks (DBRNN) as a processing tool for extraction of tremor. Moreover, we propound a training strategy for the network which enables the network to perform on-line prediction of the tremor in a myopic fashion.**

***Index Terms*: Deep Bidirectional Recurrent Neural Network, Gated Recurrent Units, Hand Tremor**

## I. Introduction

Parkinson's Disease (PD) and Essential Tremor (ET) are the most frequent neurological disorders among middle-aged and elderly people which both represent a common symptom known as Pathological Hand Tremor (PHT) [1]- [3]. Tremor is defined as an involuntary and rhythmic activity of hand which deteriorates the targeting, coordination and the speed of movements [4]- [6]. Accurate separation of the voluntary and the involuntary components is clinically and industrially necessary, based on the following major reasons:
**(i)** The involuntary component which represents the tremor in the movement of the subject is considered as a measure for physicians to perform diagnosis and treatment. Movement disorders like Parkinson's disease and Essential Tremor show slightly similar tremors in the individuals; so accurate extraction of the tremor signal provides a more reliable measure for distinguishing the similar diseases.
**(ii)** In the industrial side, accurate tremor extraction is of great importance for the robotic rehabilitation and robotic surgery systems, as it provides a measure about the tremor on the movements and helps the system to compensate/damp the involuntary movements.

A growing number of works in the literature have aimed at developing frameworks to estimate/extract the involuntary movement out of the measurement signal to address the discussed urge [7]- [19]. By visual inspection of the Fourier transform of the signals, it is observed that the frequency contents of the tremor are slightly different from the ones for voluntary movement. Generally, the tremor demonstrates a high-frequency activity which typically occurs in the range of $6-14$Hz. Therefore, the frequency-based works [18]- [23] try to adaptively or sharply filter out the tremor frequency contents and obtain a smooth waveform, which is considered as the voluntary signal.

In addition to the spectral methods, there are a number of works which have deployed the temporal analysis approaches to address this problem [24]- [30]. Among the latest works in this area, Shahtalebi *et al.* in [30] proposed a multi-rate and adaptive framework which is capable of tracking the behavior of the tremor and consequently, fine-tune a number of hyper-parameters in a real-time fashion. This work represents the state-of-the-art results in this line of research.

However, having reviewed the major works in this area and also published a number of papers in high caliber venues, we believe that the trying to separate the voluntary and involuntary movements, have neglected the fact that we can hardly assume a ground truth for the voluntary movement of the patients and therefore, the performance of the previous techniques is not necessarily measured over the actual voluntary signal. In fact, because of the distortions and overlaps that are imposed in measuring the movements, the ground truth which is deployed for measuring the performance, is not accurately defined.

In this regard, the paper makes the following contributions:
**(1)** We propose a training scheme for a Deep Bidirectional Recurrent Neural Network which learns how to eliminate the involuntary movements and extract the voluntary movement. To train the network, we use fabricated data based on the real measurement datasets, combined with a predefined voluntary movement.
**(2)** In order to provide a real-time solution for the on-line tremor removal, we train the network in a way which is capable of providing predictions on the voluntary movement in a myopic fashion.

*Corresponding author: s_shata@encs.concordia.ca

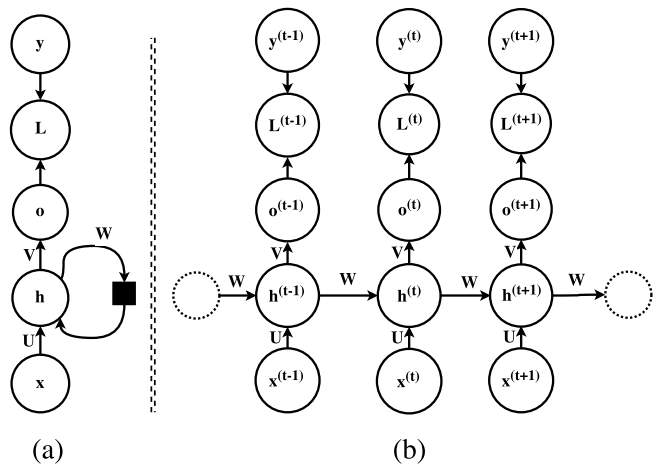


Fig. 1: Data-flow diagram of a basic RNN; (a) A RNN with its recurrent connection; (b) A time-unfolded RNN

Please note that throughout this paper the scalers, vectors and matrices are shown with small letter case, small bold letter case and capital bold letter cases, respectively.

## II. Problem Formulation

The problem that we are addressing in this work is to separate the voluntary and involuntary components of the recorded hand movement signals. Our proposed solution is based on single-channel recordings of the body movements (*i.e.,* mounting an accelerometer on hand and recording the angular velocity in one dimension). In this regard, we model the problem as

$$\boldsymbol{m}^{(t)} = \boldsymbol{c_i}^{(t)} + \boldsymbol{c_v}^{(t)}, \tag{1}$$

where the $\boldsymbol{m}^{(t)}$, $\boldsymbol{c_i}^{(t)}$ and $\boldsymbol{c_v}^{(t)}$ represent the recorded signal, the involuntary and the voluntary components, respectively. Please note that since we are dealing with a problem that the number of unknown parameters (i.e., $\boldsymbol{c_i}^{(t)}$ and $\boldsymbol{c_v}^{(t)}$) are greater than the number of known parameters (i.e., $\boldsymbol{m}^{(t)}$), the usual methods of Blind Source Separation (BSS) could not be deployed. In order to address the aforementioned estimation problem, we propose the deployment of the Recurrent Neural Networks (RNNs) as a network which learns how to damp the tremor in a huge number of training data and then is capable of removing the tremor component of the testing data. RNNs are a subcategory of neural networks and are specialized to process sequences of data (i.e., over time) [31].

### A. Recurrent Neural Networks

The main idea behind these types of networks is that different cells which are analyzing the input sequence, share their parameters with each other. Hence, each state is not only a function of the input data in that time but also a function of the previous states. In this work, we deploy the sequence-to-sequence fashion of the RNNs, as the goal is to transform the noisy input sequence to a clean output sequence. Basically, the RNNs are modeled as depicted in Fig. 1. As the Fig. 1 suggests, we can formulate the forward propagation of a sequence-to-sequence RNN as in Eqs. (2)-(5). Please note that the definition of the parameters could be found in Table I.

TABLE I: Definition of the parameters defining the mathematics of a RNN, according to Eqs. (2)-(5)

| Parameter | Definition |
|---|---|
| $\boldsymbol{b}$ | Bias vector for the input nodes |
| $\boldsymbol{W}$ | Weight matrix for hidden-to-hidden connections |
| $\boldsymbol{h}$ | Describes hidden states |
| $\boldsymbol{U}$ | Weight matrix for input-to-hidden connections |
| $\boldsymbol{x}$ | The input sequence to the network |
| *activation()* | Defines the activation function for the nodes (tanh, ReLu, ...) |
| $\boldsymbol{o}$ | The output sequence of the network |
| $\boldsymbol{c}$ | Bias vector for the output nodes |
| $\boldsymbol{V}$ | weight matrix for hidden-to-output connections |
| $\boldsymbol{y}$ | In the training phase, this is considered as the desired output sequence. If the *softmax* function is applied to the output sequence ($\boldsymbol{o}$), $\boldsymbol{y}$ represents the normalized probability of each element in the sequence. |

$$\boldsymbol{a}^{(t)} = \boldsymbol{b} + \boldsymbol{W}\boldsymbol{h}^{(t-1)} + \boldsymbol{U}\boldsymbol{x}^{(t)}, \tag{2}$$

$$\boldsymbol{h}^{(t)} = \mathit{activation}(\boldsymbol{a}^{(t)}), \tag{3}$$

$$\boldsymbol{o}^{(t)} = \boldsymbol{c} + \boldsymbol{V}\boldsymbol{h}^{(t)}, \tag{4}$$

$$\hat{\boldsymbol{y}}^{(t)} = \mathit{softmax}(\boldsymbol{o}^{(t)}). \tag{5}$$

please note that the weights and biases in Eqs. (2)-(5) will be derived and optimized during the training of the network.

If we stack a number of single-layer RNNs together, in a way that the output sequence of one is the input sequence of the next layer, we have formed a Deep RNN.

Here we introduced the RNNs with basic hidden cells. In the next subsection, a brief introduction on a more complex hidden cell is provided which is capable of storing long-term dependencies in the input sequence.

### B. Gated Recurrent Unit (GRU)

The GRU cells represent a more sophisticated hidden cell for RNNs which are capable of capturing the dependencies in different time scales [32]. They benefit from two internal gates, namely called "*update gate*" and "*reset gate.*" The formulations governing a GRU cell are as follows

$$r = \sigma\big(\boldsymbol{U}_r\boldsymbol{x} + \boldsymbol{W}_r\boldsymbol{h}^{(t-1)}\big), \tag{6}$$

$$z = \sigma\big(\boldsymbol{U}_z\boldsymbol{x} + \boldsymbol{W}_z\boldsymbol{h}^{(t-1)}\big), \tag{7}$$

$$\tilde{h}^{(t)} = \mathit{activation}\big(\boldsymbol{U}\boldsymbol{x} + \boldsymbol{W}(\boldsymbol{r} \odot \boldsymbol{h}^{(t-1)})\big), \tag{8}$$

$$h^{(t)} = zh^{(t-1)} + (1-z)\tilde{h}^{(t)}. \tag{9}$$

Note that in GRU, the reset gate is denoted by $r$ and the update gate is denoted by $z$. Consequently, their corresponding weights are denoted by $\boldsymbol{U}_r, \boldsymbol{W}_r$ and $\boldsymbol{U}_z, \boldsymbol{W}_z$, respectively. $\sigma$ also denotes a logistic sigmoid function.

Intuitively speaking, the update gate determines the degree of updating in the current unit with a new hidden state ($\tilde{h}^{(t)}$) based on the newly arrived data. Similarly, the reset gate, makes the unit to forget the previous information and focus on the new data [33].

Next, we introduce the bidirectional RNNs and their application in our solution to tremor studies.

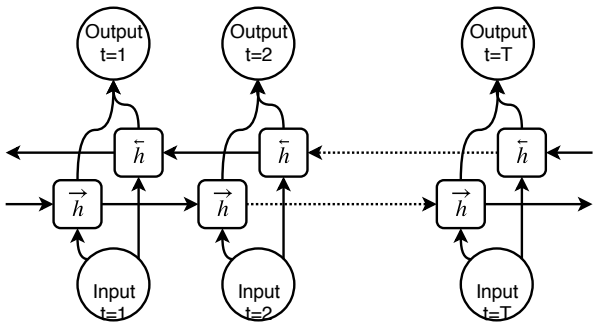


Fig. 2: Architecture of bidirectional RNN. $\overleftarrow{h}$ defines the backward cells, and $\overrightarrow{h}$ defines the forward cell of the network.

### C. Bidirectional Recurrent Neural Networks

In RNNs with basic cells, the output of the first cells is mainly based on the input signal, and not much information from previous cells is available. Thus we can observe that the output of the first cells is less accurate and as time goes on, the network provides better results. However, in many applications such as the problem we are addressing in this work, we are feeding the network with the whole sequence and thus at time $t = 1$ we already have the input samples at time $t = n; n > 1$. To exploit all the information available in the input of the network, the Bidirectional Recurrent Neural Networks (BRNN) are developed [34]. In these networks, as depicted in Fig. 2, two sets of cells are utilized; the *forward cells* analyze the input sequence in the positive direction of time and the *backward cells* analyze the sequence in a reverse direction of time. The benefit of BRNN for our application is that the forward cells can be deployed for on-line predicting scheme and the backward cells can be deployed in off-line post-processing scheme.

This finalizes the problem formulation and in the next section, we describe the proposed solution.

## III. The SFP-DBRNN Framework

The novelty of SFP-DBRNN method mostly lays on the training strategy and the way we have fitted these methodologies to the discussed issue. Next, we will explain the network architecture and the training strategy.

### A. Network Architecture

From prior knowledge, we know that typically the tremor occurs in the frequency range of 6-14 Hz, so the sampling rate of 100 Hz for the signals seem to provide a clear representation of the movements. On the other hand, we believe that a small segment of the signals can hardly represent an extremely low-frequency voluntary movement. Consequently, we designed a network which is capable of analyzing a segment of 4 seconds sampled at 100 Hz as the input signal, meaning that it contains 400 cells in each layer. The discussed network forms one layer, and we have stacked 4 similar layers together to form a deep architecture. So in total, we have designed a 4 layer bidirectional recurrent neural network, containing 400 GRU cells in each layer. Also note that the deployed activation function for the whole network is ReLu [35].

### B. Training Strategy

As in Eq. (1), the recorded signal is a summation of the voluntary and involuntary movement components of the subject. Our strategy is to generate training samples based on this equation and then train the network to separate the two parts. To this aim, we deploy the recorded resting tremor of different individuals, multiplied by a random gain and then downsampled, if necessary, to 100 Hz. To apply the random gain on the tremor segment, we first scale the signal to the range of 0-1 and then multiply it by a random number, drawn from a uniform distribution ($\sim \mathcal{U}(0, 0.5)$)

For the voluntary part, $\boldsymbol{c_v}$, a sinusoidal waveform with random amplitude, frequency and phase is generated based on uniform distributions as $\sim \mathcal{U}(0, 0.25)$, $\sim \mathcal{U}(0, 3)$ and $\sim \mathcal{U}(0, \pi)$, respectively. The randomness in generating the voluntary component helps to avoid the over-fitting on the training data and also better generalizes the model. The fabricated training samples are shown as

$$\boldsymbol{m}^f = \boldsymbol{c_i}^f + \boldsymbol{c_v}^f, \tag{10}$$

where $\boldsymbol{c_i}^f$ denotes the fabricated involuntary and $\boldsymbol{c_v}^f$ denotes the fabricated voluntary component. The amplitude range for both $\boldsymbol{c_i}^f$ and $\boldsymbol{c_v}^f$ are set to be within 0-0.5 and thus the range of $\boldsymbol{m}^f$ is within 0-1. This format of scaling for the inputs helps to experiment different activation functions easily and is recommended for deep learning techniques. In the training phase, $\boldsymbol{m}^f$ is fed as the input to the network and $\boldsymbol{c_v}^f$ is fed as the target; so in several iterations, the network learns how to transform the $\boldsymbol{m}^f$ to $\boldsymbol{c_v}^f$.

The most important part of the training stage in this work is the way we feed the input and the target to the network. As stated before, one important goal of this work is providing predictions on the voluntary movement, one sample ahead of time. In this regard, we first prepare the segments of 401 samples length for $\boldsymbol{c_i}^f$, $\boldsymbol{c_v}^f$ and $\boldsymbol{m}^f$. Then we take $\boldsymbol{m}^f(1:400)$ as the input to the network and $\boldsymbol{c_v}^f(2:401)$ as the target of the network. More specifically, the target fed to the network is actually one sample ahead of the correct target. By feeding the input and the target in this format, we are not only teaching the network how to eliminate the involuntary component, but also we are forcing the network to demonstrate a predicting behavior over the voluntary movement.

This finalizes the introduction of SFP-DBRNN . In the next section, we provide the simulation results of the solution.

## IV. Simulations

To train and evaluate the SFP-DBRNN framework, we have deployed the dataset of movement disorders, freely available on-line by Motus Bioengineering Inc., Benicia, CA. The dataset represents single channel recordings of patients with hand tremor recorded with bi-axial gyroscopes. The signals are recorded with the sampling rate of 100 Hz, and they represent the angular velocity of the movement (degree per second). To generate the training data, recordings of 10 patients are concatenated to form a single vector of 15000 samples. Then, random segments of this vector are extracted and deployed. Consequently, the trained network is not subject-specific and

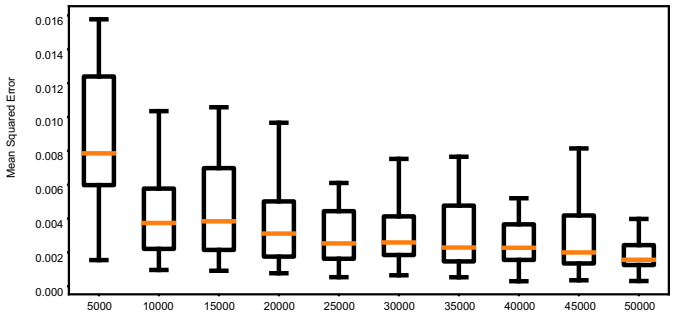


Fig. 3: Network convergence in the training phase over increasing the number of iterations.

provides a general solution for the voluntary movement extraction/prediction.

For the training process, we defined the loss function as

$$\text{Loss (MSE)} = \sqrt{\sum(\boldsymbol{c}_{\boldsymbol{v}}^{f}(2:401) - \hat{\boldsymbol{c}_{\boldsymbol{v}}})^2}, \tag{11}$$

and the Adam optimizer [36] is deployed to minimize the loss (the learning rate is set to 0.0001). We have evaluated the performance of the model during the training process over the fabricated validation data and as it is depicted in Fig. 3, the best results are achieved after 50000 iterations.

To test the trained model, we deployed fabricated test data according to the procedure for training data but with different patients. In this case, we can quantitatively measure the performance of the network, based on the known ground truth. The mean squared error is measured during the training and as it is depicted in Fig. 3, the best results are achieved for 50000 iterations. Fig. 4 demonstrates two instances of the fabricated test data and the network output. To further investigate the performance of the trained network, the following error measures were deployed,

$$\text{Normalized Root MSE} = \frac{\sqrt{MSE}}{max(\boldsymbol{c}_{\boldsymbol{v}}^{f}) - min(\boldsymbol{c}_{\boldsymbol{v}}^{f})}, \tag{12}$$

$$\text{Power Ratio Factor (PRF)} = \frac{MSE}{\frac{1}{400}\sum(\boldsymbol{c}_{\boldsymbol{v}}^{f})^2}. \tag{13}$$

The measured performance over 100 validation samples according to MSE, PRF and NRMSE are 0.0023, 0.8088 and 0.4367, respectively.

Fig. 5 depicts the application of SFP-DBRNN on real data containing real voluntary movement. In this case, by visual inspection, we clearly observe the performance of the system.

As we highlighted in Section. I, one of the goals of this work is to develop a processing tool for on-line analysis of the hand movement signals and providing prediction on the voluntary movement, one sample ahead of time. We tried to incorporate this aim in the training strategy of the network by feeding the target, one sample shifted to future. By having a closer look at Fig. 4(b), we can clearly observe that the output of the network, which is the estimated signal for voluntary movement, is one sample ahead of the ground truth, which means that we have successfully fulfilled our vision in designing the network.

## V. Conclusion

In this work, we proposed the idea that for tremor extraction applications, no accurate and reliable ground truth for the recorded signals does exist and thus the performance of the proposed methods in the literature is not accurately measured. To address this gap, we proposed a processing framework based on deep bidirectional neural networks which learns the behavior of the tremor over various fabricated training data and then is capable of identifying and removing the tremor. The fabricated training data are generated based on segmented real recordings of resting tremor, modulated by a known ground truth of voluntary movement. Moreover, we devised a training strategy which empowers the network with on-line prediction of the tremor, one sample ahead of time.

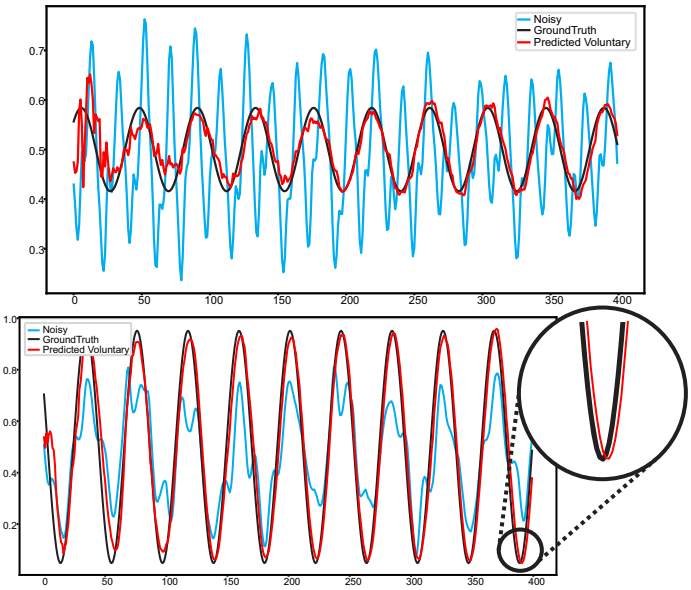


Fig. 4: Performance of the SFP-DBRNN over the fabricated test data. The horizontal axis indicates time samples and the vertical axis shows the amplitude of the signal.

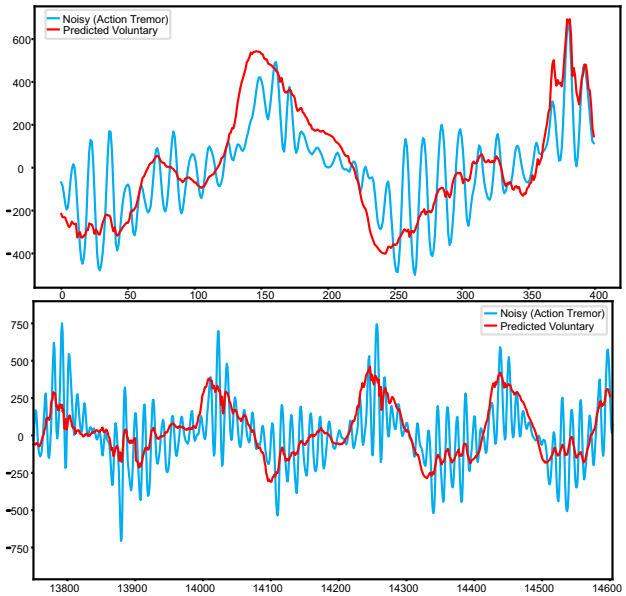


Fig. 5: Performance of the SFP-DBRNN over the real test data. The horizontal axis shows time samples and the vertical axis shows the amplitude of the signal.

## REFERENCES


[1] C. Kotsavasiloglou, N. Kostikis, D. Hristu-Varsakelis, M. Arnaoutoglou, "Machine Learning-based Classification of Simple Drawing Movements in Parkinson's Disease," *In Biomedical Signal Processing and Control*, vol. 31, pp. 174-180, 2017.

[2] C. Camara, P. Isasi, K. Warwick, V. Ruiz, T. Aziz, J. Stein, E. Bakstein, "Resting Tremor Classification and Detection in Parkinson's Disease Patients," *Biomedical Signal Processing and Control*, vol. 16, pp. 88-97, 2015.

[3] E.J. Smits et al., "Graphical Tasks to Measure Upper Limb Function in Patients With Parkinson's Disease: Validity and Response to Dopaminergic Medication," *IEEE J. Biomed. Health Inform.*, vol. 21, no. 1, pp. 283-289, 2017.

[4] O. Dick, A. Nozdrachev, "Features of Parkinsonian and Essential Tremor of the Human Hand," *Human Physiology*, vol. 42, pp. 271-278, 2016.

[5] D. Tarsy, "Handbook of Essential Tremor and Other Tremor Disorders," *Neurology*, vol. 70, no. 4, pp. 326-326, 2008.

[6] C. Liu et al., "Closed-Loop Control of Tremor-Predominant Parkinsonian State Based on Parameter Estimation," *IEEE Trans. Neural Syst. Rehabil. Eng.*, vol. 24, no. 10, pp. 1109-1121, 2016.

[7] A. Hossen, M. Muthuraman, J. Raethjen, G. Deuschl, U. Heute, "Discrimination of Parkinsonian Tremor from Essential Tremor by Implementation of a Wavelet-based Soft-Decision Technique on EMG and Accelerometer Signals," *Biomedical Signal Processing and Control*, vol. 5, Issue 3, pp. 181-188, 2010.

[8] S.F. Atashzar, M. Shahbazi, O. Samotus, M. Tavakoli, M.S. Jog, R.V. Patel, "Characterization of Upper-Limb Pathological Tremors: Application to Design of An Augmented Haptic Rehabilitation System," *IEEE J. Sel. Topics Signal Process.*, vol. 10, no. 5, pp. 888-903, 2016.

[9] F. Xiao, Y. Gao, S. Wang, J. Zhao, "Prediction of Pathological Tremor using Adaptive Multiple Oscillators Linear Combiner," *Biomedical Signal Processing and Control*, vol. 27, pp. 77-86, 2016.

[10] B. Taheri, D. Case and E. Richer, "Adaptive Suppression of Severe Pathological Tremor by Torque Estimation Method," *IEEE/ASME Trans. Mechatronics*, vol. 20, no. 2, pp. 717-727, 2015.

[11] K.C. Veluvolu, S. Tatinati, S.M. Hong and W.T. Ang, "Multistep Prediction of Physiological Tremor for Surgical Robotics Applications," *IEEE Trans. Biomed. Eng.*, vol. 60, no. 11, pp. 3074-3082, 2013.

[12] J.P. Giuffrida, D.E. Riley, B.N. Maddux, and D. A. Heldman, "Clinically Deployable Kinesia Technology for Automated Tremor Assessment," *Movement Disorders*, vol. 24, no. 5, pp. 723-730, 2009.

[13] A. Kucukelbir, A. Kushki and K.N. Plataniotis, "A New Stochastic Estimator for Tremor Frequency Tracking," *IEEE Int. Con. Acoustics, Speech & Signal Process. (ICASSP)*, pp. 421-424, 2009.

[14] S. Dosen, S. Muceli, J.L. Dideriksen, J.P. Romero and E. Rocon, J. Pons and D. Farina, "Online Tremor Suppression Using Electromyography and Low-Level Electrical Stimulation," *IEEE Trans. Neural Syst. Rehabil. Eng.*, vol. 23, no. 3, pp. 385-395, 2015.

[15] K. Kiguchi and Y. Hayashi, "An EMG-based Control for an Upper-Limb Power-Assist Exoskeleton Robot," *IEEE Trans. Systems, Man, and Cybernetics, Part B*, vol. 42, no. 4, pp. 1064-1071, 2012.

[16] A.P.L. Bo, P. Poignet and C. Geny, "Pathological Tremor & Voluntary Motion Modeling & Online Estimation for Active Compensation," *IEEE Trans. Neural Syst. Rehabil. Eng.*, vol. 19, no. 2, pp. 177-185, 2011.

[17] K.C. Veluvolu and W.T. Ang, "Estimation of Physiological Tremor from Accelerometers for Real-Time Applications," *Sensors*, vol. 11, no. 3, pp. 3020-3036, 2011.

[23] K. Veluvolu, W. Ang, "Estimation and Filtering of Physiological Tremor for Real-Time Compensation in Surgical Robotics Applications," *Int. J. Med. Robot. & Comput. Assis. Surgery*, vol. 6, no. 3, pp. 334-342, 2010.

[18] S. Wang, Y. Gao, J. Zhao, H. Cai, "Adaptive Sliding Bandlimited Multiple Fourier Linear Combiner for Estimation of Pathological Tremor," *Biomedical Signal Processing and Control*, vol. 10, pp. 260-274, 2014.

[19] K.C. Veluvolu, W.T. Latt, W.T. Ang, "Double Adaptive Bandlimited Multiple Fourier Linear Combiner for Real-Time Estimation/Filtering of Physiological Tremor," *Biomedical Signal Processing and Control*, vol. 5, Issue 1, pp. 37-44, 2010.

[20] K.C. Veluvolu, W.T. Latt, and W.T. Ang, "Double Adaptive Fourier Linear Combiner for Real-Time Estimation/Filtering of Tremor," *J. Biomed. Signal Process. & Control*, vol. 5, pp. 33-44, 2010.

[21] S. Wang, Y. Gao, J. Zhao, and H. Cai, "Adaptive Sliding Bandlimited Multiple Fourier Linear Combiner for Estimation of Pathological Tremor," Biomed. Sig. Process. & Control, vol. 10, pp. 260-274, 2014.

[22] K.C. Veluvolu, U.X. Tan, W.T. Latt, C. Shee, W.T. Ang, "Bandlimited Multiple Fourier Linear Combiner for Real-Time Tremor Compensation," *IEEE Int. Conf. Eng. Med. & Biol. (EMBC)*, pp. 2847-2850, 2007.

[24] A. Hossen, M. Muthuraman, J. Raethjen, G. Deuschl, U. Heute, "Discrimination of Parkinsonian Tremor from Essential Tremor by Implementation of a Wavelet-Based Soft-Decision Technique on EMG and Accelerometer Signals," *Biomed. Sig. Process. & Control*, vol. 5, no. 3, pp. 181-188, 2010.

[25] O. Geman and C. Zamfir, "Using Wavelet for Early Detection of Pathological Tremor," *European Sig. Process. Conf.*, 2012, pp. 1723-1727.

[26] L. Popovic and M.B. Popovic, "Extraction of Tremor for Control of Neural Prostheses: Comparison of Discrete Wavelet Transform and Butterworth Filter," *IEEE Sym. Neural Netw. Appl. Elect. Eng. (NEUREL)*, pp. 137-140, 2008.

[27] L. Ai, J. Wang, and R. Yao, "Classification of Parkinsonian and Essential Tremor using Empirical Mode Decomposition and Support Vector Machine," *Digit. Signal Process.*, vol. 21, no. 4, pp. 543-550, 2011.

[28] O. Sushkova, A. Gabova, A. Karabanov, I. Kershner, K.Y. Obukhov, and Y.V. Obukhov, "Time-frequency Analysis of Simultaneous Measurements of Electroencephalograms, Electromyograms, and Mechanical Tremor under Parkinson Disease," *Journal of Communications Technology and Electronics*, vol. 60, no. 10, pp. 1109–1116, 2015.

[29] R. J. Elble, H. Hellriegel, J. Raethjen, and G. Deuschl, "Assessment of Head Tremor with Accelerometers Versus Gyroscopic Transducers," *Movement Disorders Clinical Practice*, vol. 4, no. 2, pp. 205–211, 2017.

[30] S. Shahtalebi, A. Mohammadi, S. F. Atashzar and R. V. Patel, "A Multi-rate and Auto-adjustable Wavelet Decomposition Framework for Pathological Hand Tremor Extraction," *IEEE Global Conf. on Signal and Information Processing (GlobalSIP)*, pp.432–436, 2017.

[31] I. Goodfellow, Y. Bengio, A. Courville, "Deep Learning," *MIT Press*, 2016.

[32] K. Cho, B. V. Merriënboer, C. Gulcehre, D. Bahdanau, F. Bougares, H. Schwenk and Y. Bengio, "Learning Phrase Representations Using RNN Encoder-decoder for Statistical Machine Translation", *arXiv Preprint*, 2014.

[33] J. Chung, C. Gulcehre, K. Cho and Y. Bengio, "Empirical Evaluation of Gated Recurrent Neural Networks on Sequence Modeling," *arXiv Preprint*, 2014.

[34] M. Schuster and K.K. Paliwal, "Bidirectional Recurrent Neural Networks," *IEEE Transactions on Signal Processing*, vol. 45, no. 11, pp. 2673–2681, 1997.

[35] V. Nair and G. E. Hinton, "Rectified Linear Units Improve Restricted Boltzmann Machines," *Proc. of Int. Conf. on Machine Learning (ICML)*, PP. 807–814, 2010.

[36] D. P. Kingma and J. Ba, "Adam: A method for stochastic optimization," *arXiv Preprint*, 2014.